Mass Transfer Systems

Multi-Jet™ and Cyclo-Jet™ Aspirator Technologies

Two recent start-up installations where innovative aspirator technologies have met and exceeded customer expectations.

Multi-Jet™

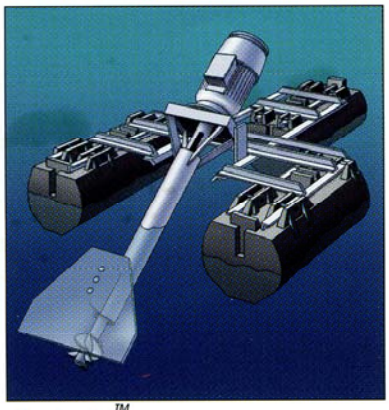

Cyclo-Jet™

Aerated Lagoon for Manufacturer of Specialty Chemical

Volume:
0.6 Mgal (2,270 cubic meters)
Tanks Dimensions:
164 ft. (50 m) Length x 144 ft. (44 m) Width x 7 ft. (2.1 m) Depth
Loadings:

Ammonia/Ammonium	20-40 mg/l
TKN	50-80 mg/l
BOD_5	53 lbs./day
COD	330 lbs./day

Effluent:
Rainbow Trout Toxicity Standards
MTS Equipment:
Four (4) Multi-Jet™ Model MTM02 self-aspirating submersible aerators with 7.5 HP motors.
Customer Requirements:
Effective NO_x-X Removal
Reliable Mechanical DesignEnergy
Efficient Operation Over a Range in Depth
Portable
Short Lead Time

Aerated Lagoon for Leachate Waste

Volume:
0.9 Mgal (3,400 cubic meters)
Tanks Dimensions:
197 ft. (60 m) Length x 66 ft. (20 m) Width x 10 ft. (3 m) Depth
Loadings:
Peak Flow = 4.39 Mgal/month (16,630 m^3/month)
Average Flow = 3.10 Mgal/month (11,730 m^3/month)
95th Percentile BOD_5 - 617 mg/l
Effluent:
BOD_5 < 300 mg/l
Suspended Solids < 250 mg/l
MTS Equipment:
Three (3) Cyclo-Jet™ Model MTC15 floating, self-aspirating aerators with 15 HP motors
Customer Requirements:
Reliability
Good Mixing and Aeration
Flexibility in Placement
Lower Installation Costs
Easy Access for Maintenance

MASS TRANSFER SYSTEMS
23 Walpole Park South
Walpole, Massachusetts 02081 USA
T: (508) 660-9150 F: (508) 660-9151 E-Mail: mts.sales@mtsjets.com
www.mtsjets.com